ELW系列直线导轨尺寸表

(2)ELW-SC/ELW-CC

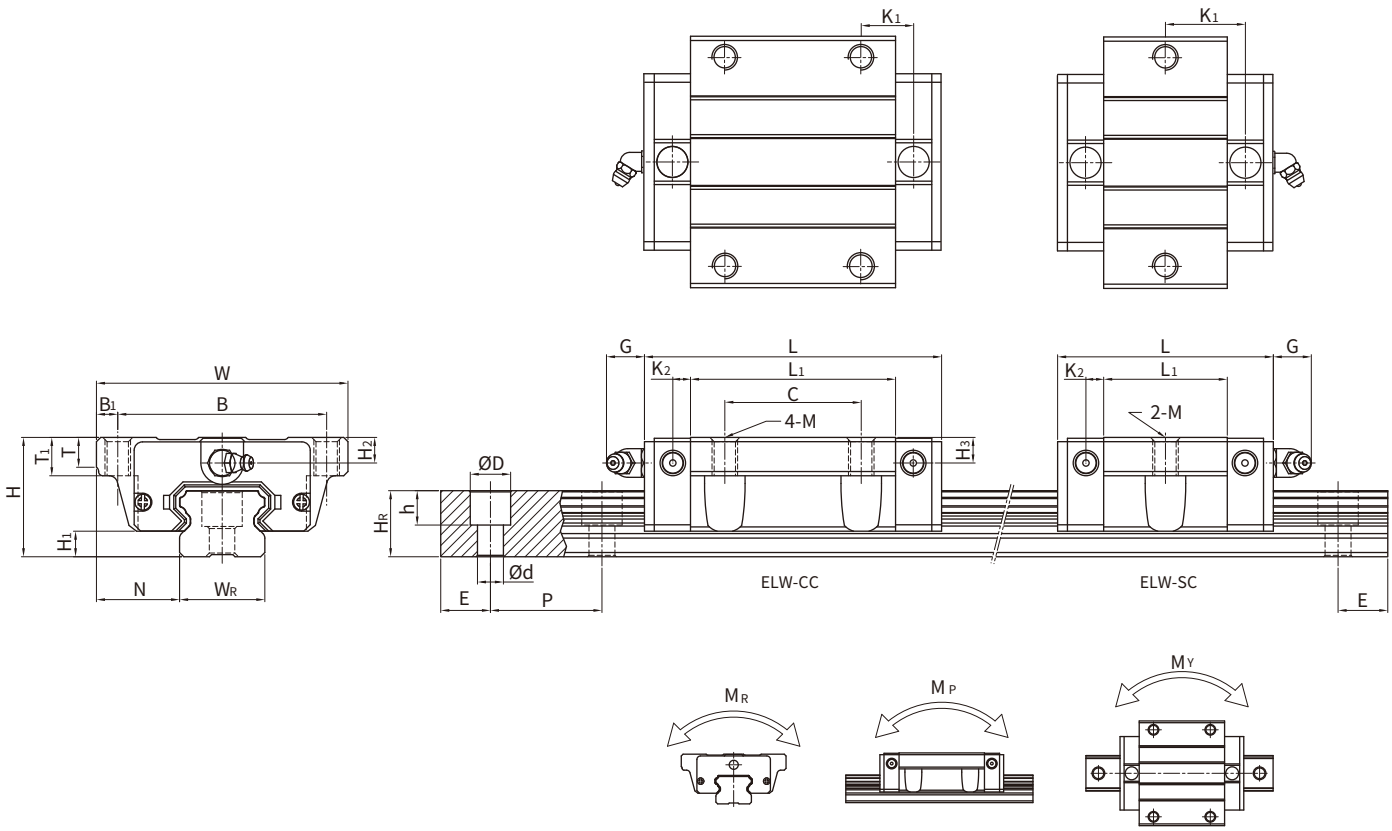

型号 Model No	组件尺寸 (mm) Dimensions of Assembly			滑块尺寸(mm) Dimensions of Block														导轨尺寸(mm) Dimensions of Rail							导轨固定螺栓尺寸 Mounting Bolt for Rail	额定动载荷 Basic Dynamic Load Rating	额定静载荷 Basic Staic Load Rating	容许静力矩 Static Rated Moment(kgf.m)			重量 Weight	
	H	H_1	N	W	B	B_1	C	L_1	L	K_1	K_2	G	M	T	T_1	H_2	H_3	W_R	H_R	D	h	d	P	E	(mm)	C	C_0	M_R	M_P	M_Y	滑块 block	滑轨 Rail
																										kN	kN	N-m	N-m	N-m	kg	kg/m
ELW15SC	24	4.5	18.5	34	41	5.5	-	23.1	40.1	14.8	3.5	5.7	M5	5	7	5.5	6	15	12.5	7.5	5.3	4.5	60	20	M4x16	5.35	9.40	0.08	0.04	0.04	0.12	1.25
ELW15CC							26	39.8	56.8	10.15																7.83	16.19	0.13	0.01	0.01	0.17	
ELW20SC	28	6	19.5	42	49	5	-	29	50	18.75	4.15	12	M6	7	9	6	6	20	15.5	9.5	8.5	6	60	20	M5x16	7.23	12.74	0.13	0.06	0.06	0.16	2.08
ELW20CC							32	48.1	69.1	12.3																10.31	21.13	0.22	0.16	0.16	0.28	
ELW25SC	33	7	25	48	60	6.5	-	35.5	59.1	21.9	4.55	12	M8	7.5	10	8	8	23	18	11	9	7	60	20	M6x20	11.40	19.50	0.23	0.12	0.12	0.26	2.67
ELW25CC							35	59	82.6	16.15																16.27	32.40	0.38	0.32	0.32	0.42	
ELW30SC	42	10	31	60	72	9	-	41.5	69.5	26.75	6	12	M10	7	10	8	9	28	23	14	12	9	80	20	M8x25	16.42	28.10	0.40	0.21	0.21	0.46	4.35
ELW30CC							40	70.1	98.1	21.05																23.70	47.46	0.68	0.55	0.55	0.77	

注:1kgf=9.81N
1kN=101.97kgf